| REVISIONS | | | |
|---|---|---|---|
| REV. | DESCRIPTION | DATE | APPROVED |
| AA | NEW PART | 04.28.25 | CHASE |
| AB | FLANGE DEPTH WAS 1.265/1.295 \| .125 MATERIAL (11 GAUGE) WAS .062 (18 GAUGE) | 06.04.25 | CHASE |

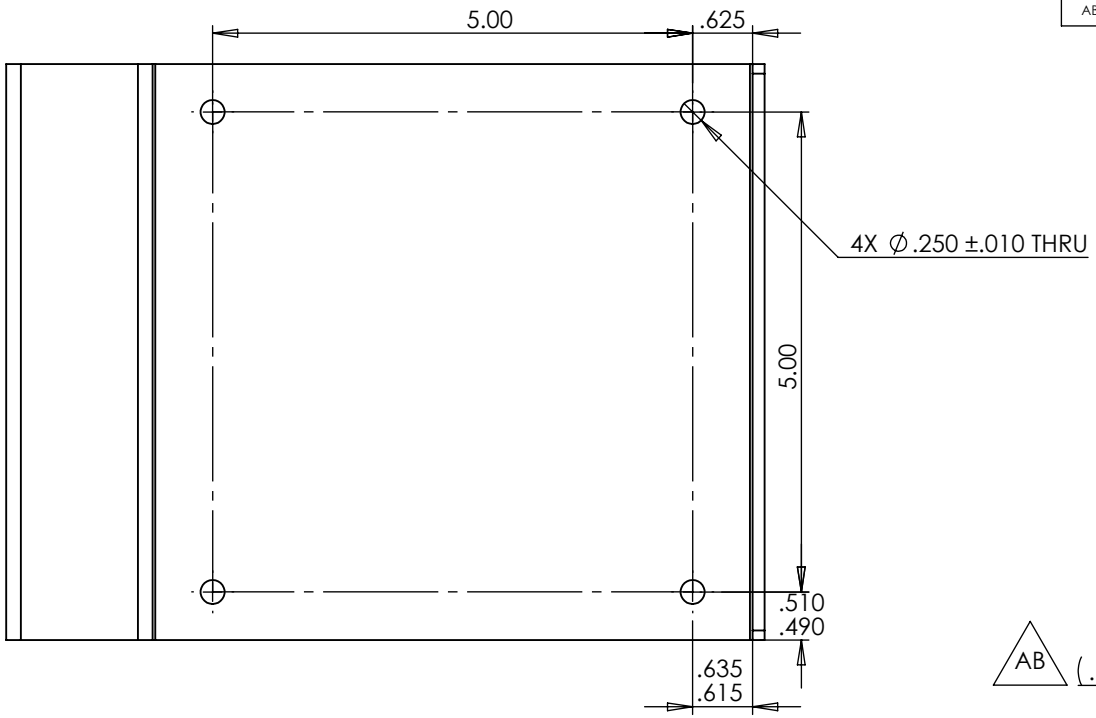


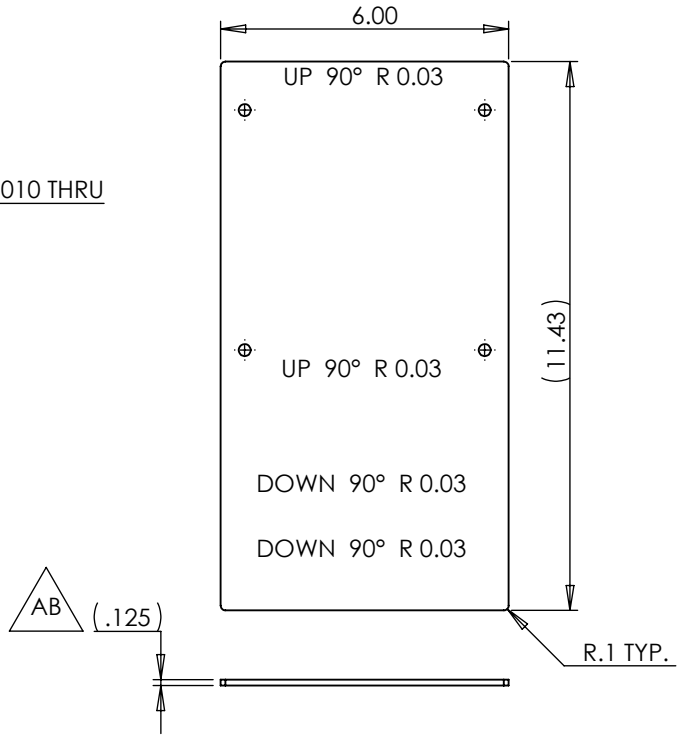


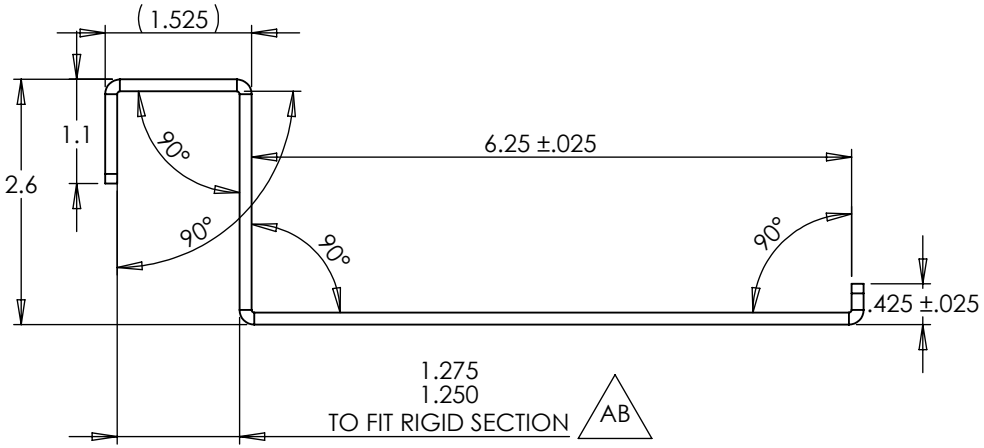


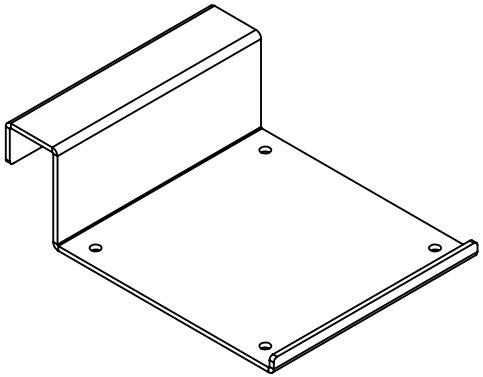

**NOTES:**
1. REFERENCE CAD FOR MISSING DIMS
2. PART TO BE FREE OF BURRS AND SHARP EDGES
3. PROTECT MATERIAL, NO SURFACE GOUGES OR SCRATCHES PERMITTED

| | | | |
|---|---|---|---|
| **DECTRON LLC** www.dectronusa.com | TOLERANCE STANDARDS | PART | **70-0420-00** REV **AB** |
| PROPRIETARY & CONFIDENTIAL THE INFORMATION CONTAINED IN THIS DRAWING IS THE SOLE PROPERTY OF DECTRON LLC. ANY REPRODUCTION IN PART OR AS A WHOLE WITHOUT THE WRITTEN PERMISSION OF DECTRON LLC IS PROHIBITED. | DECIMAL .x \| ±.025 .xx \| ±.010 .xxx \| ±.005 | TITLE | POWER SUPPLY BRACKET |
| | | MATL | SHEET, STEEL, .125in (11 GAUGE) |
| SIZE A DO NOT SCALE DRAWING DRAWN CHASE 06.04.25 | ANGULAR ±2° | FINISH | CARDINAL BLACK TEXTURE POWDER COAT T241-BK59 |

5 4 3 2 1