REVISIONS			
REV.	DESCRIPTION	DATE	APPROVED
1	WIDENED TO FIT WIDER FLEX HOUSING	01/10/17	STRO

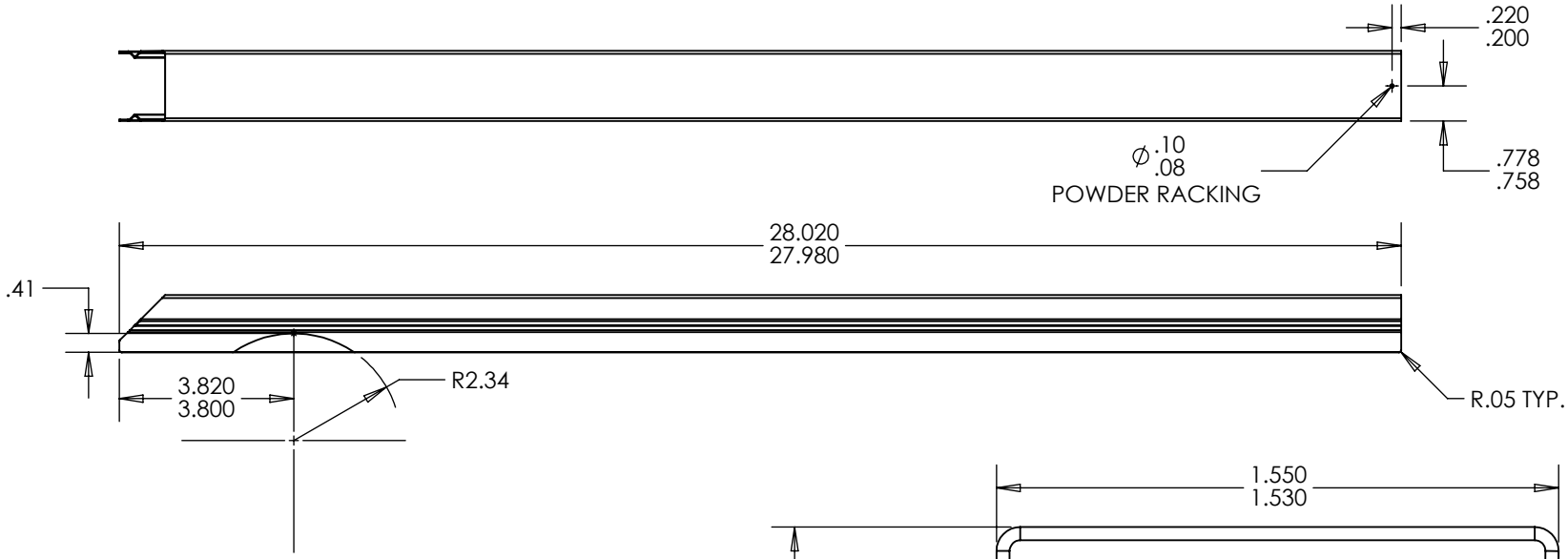

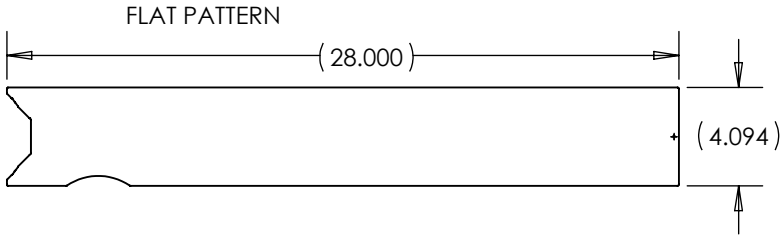

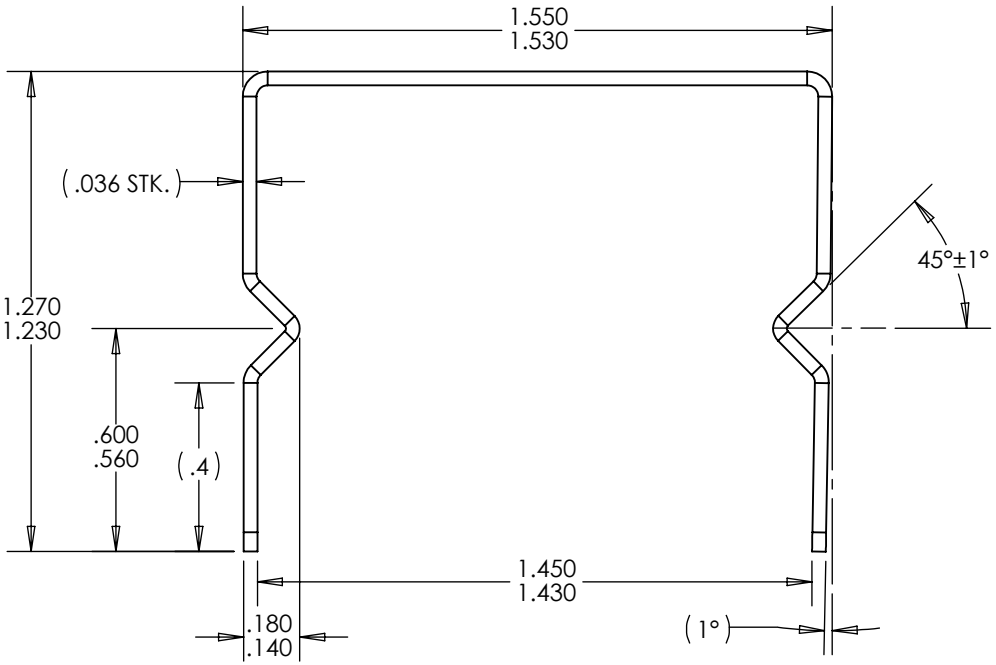

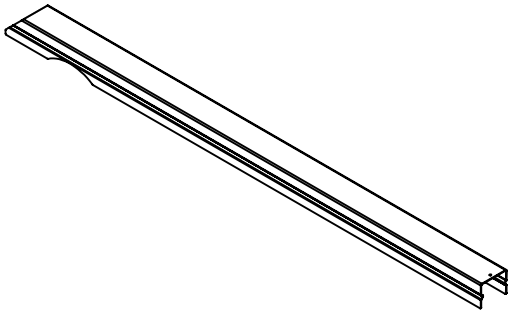

NOTES:
1. **REFERENCE CAD FOR MISSING DIMS**
2. **PART TO BE FREE OF BURRS & SHARP EDGES**

DECTRON LLC 9750 SW WILSONVILLE ROAD SUITE 300 WILSONVILLE, OR 97070	PART	**70-0271-00**		REV	**1**
PROPRIETARY & CONFIDENTIAL THE INFORMATION CONTAINED IN THIS DRAWING IS THE SOLE PROPERTY OF DECTRON AND STROHMAIER CORPORATION. ANY REPRODUCTION IN PART OR AS A WHOLE WITHOUT THE WRITTEN PERMISSION OF DECTRON OR STROHMAIER CORPORATION IS PROHIBITED.	TITLE	**CABLE COVER, 24" FLEX, BLACK**			
TOLERANCES DECIMAL: .X ±.025 .XX ±.010 .XXX ±.005 ANGULAR: ±2°	MATERIAL	**SHEET, .036 (20 GA) STEEL, CR**	FINISH	**S/W PHANTOM BLACK POWDER COAT #HBT4-C002**	
SIZE A DO NOT SCALE DRAWING					
DRAWN CHASE 01/10/17					
CHECKED STRO 01/11/17					

5 4 3 2 1